Future Electronics Requirements of DoD: RF Digital Microwave/Millimeter Wave Technology

By

Max N. Yoder
Director, Electronics Division
Office of Naval Research
Arlington, VA 22217-5660

on

25 August 1998

at

“6.1 A III-V Semiconductor Workshop”

Presentation Retrieval: ftp.onr.navy.mil/PUB/ONR-312/61Workshop

Conventional Radar

Emits Train of Same Frequency Pulses

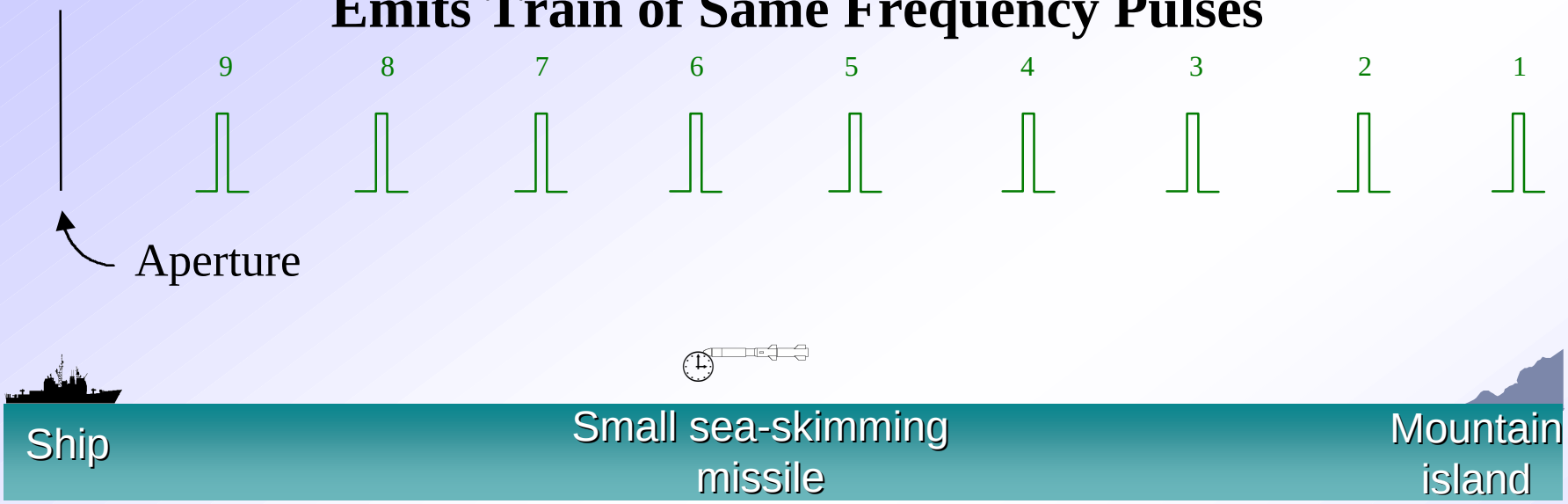

<u>The Problem:</u>

Large Echo From Pulse #1 Arrives Back At The Same Time As Does Small Echo From Pulse #6

This Can Require Up To 110db Dynamic Range As Only Doppler Separates The Two.

High Dynamic Range Scenario for T.A.D.

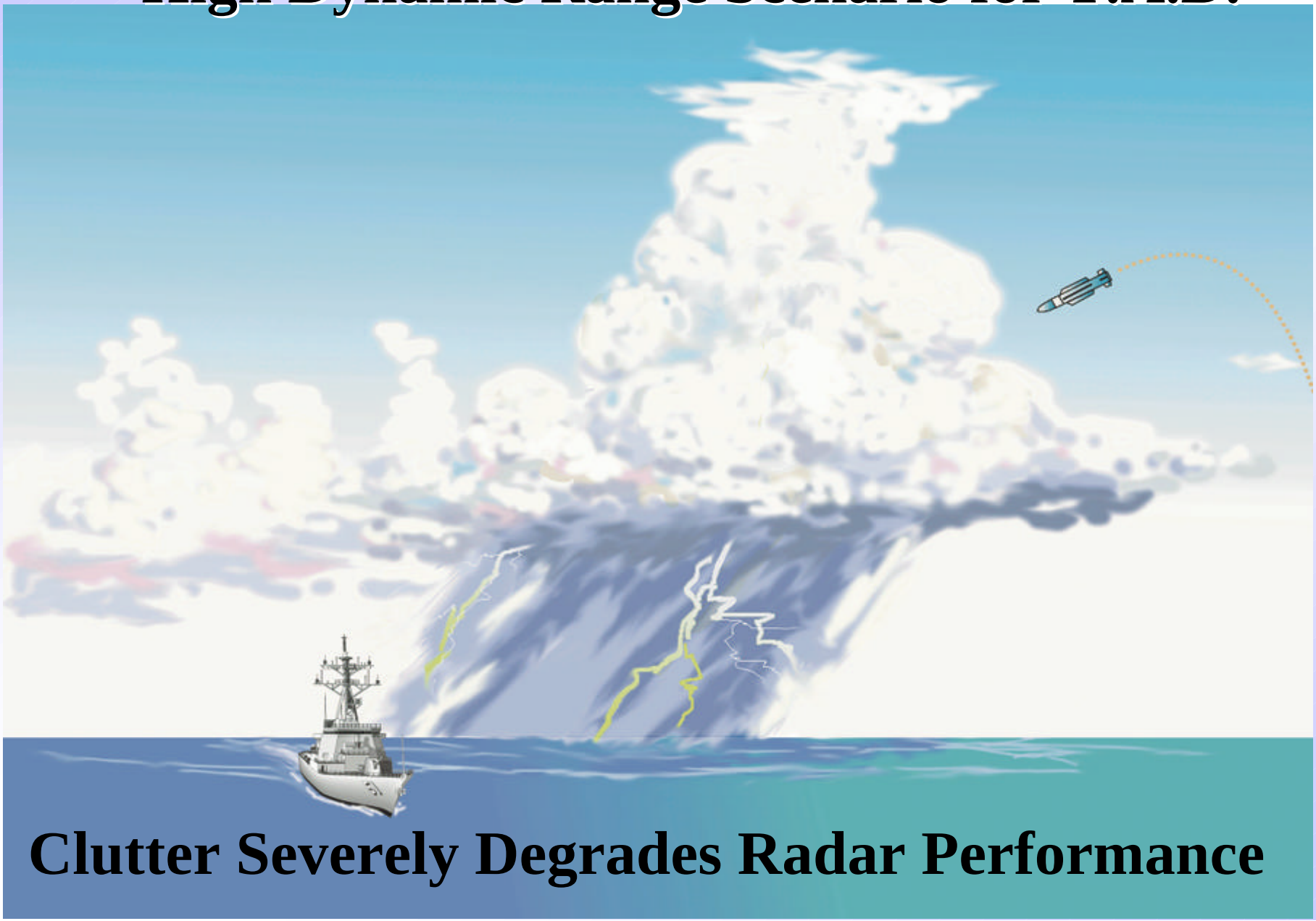

Clutter Severely Degrades Radar Performance

Phase-Shift-Steered vs Incremental Time Steered Arrays

1. **COMMONLY RECOGNIZED (ANALOG) PHASED ARRAY EQUATION**

$$\sin q = f \lambda / 2 \pi d$$

(WHERE f IS PHASE AND λ IS WAVELENGTH) angle depends on frequency

2. **EQUALLY VALID "PHASED" ARRAY EQUATION**

$$\sin q = \tau c / d;$$ **frequency invariant**

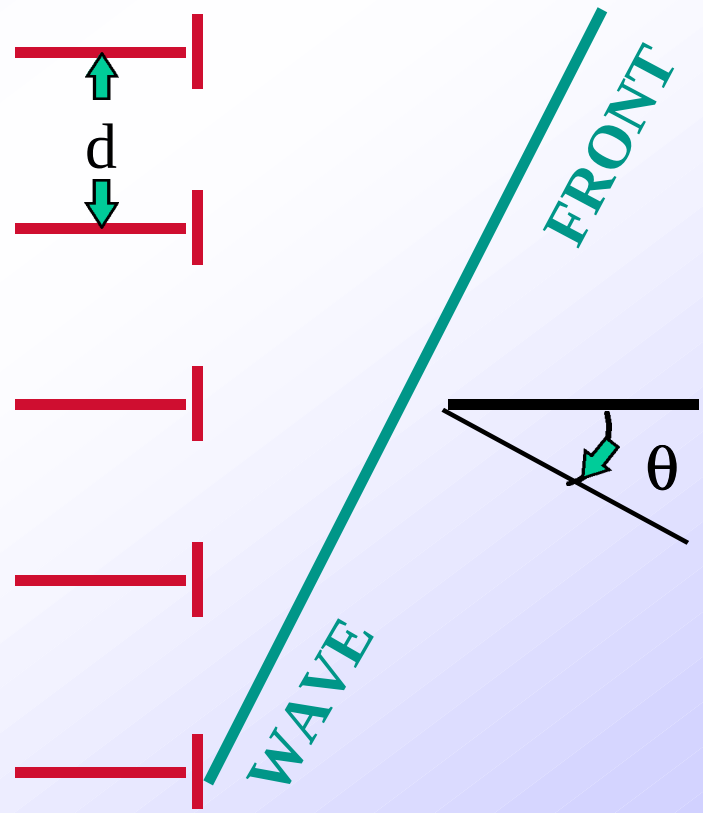

(WHERE τ IS DIFFERENTIAL DELAY TIME BETWEEN ELEMENTS AND c IS VELOCITY OF LIGHT) DEPICTS BEAM STEERING TO BE INDEPENDENT OF FREQUENCY AND DIRECTLY PROPORTIONAL TO DIFFERENTIAL TIME SHIFT)

Large Time Bandwidth Product Signals

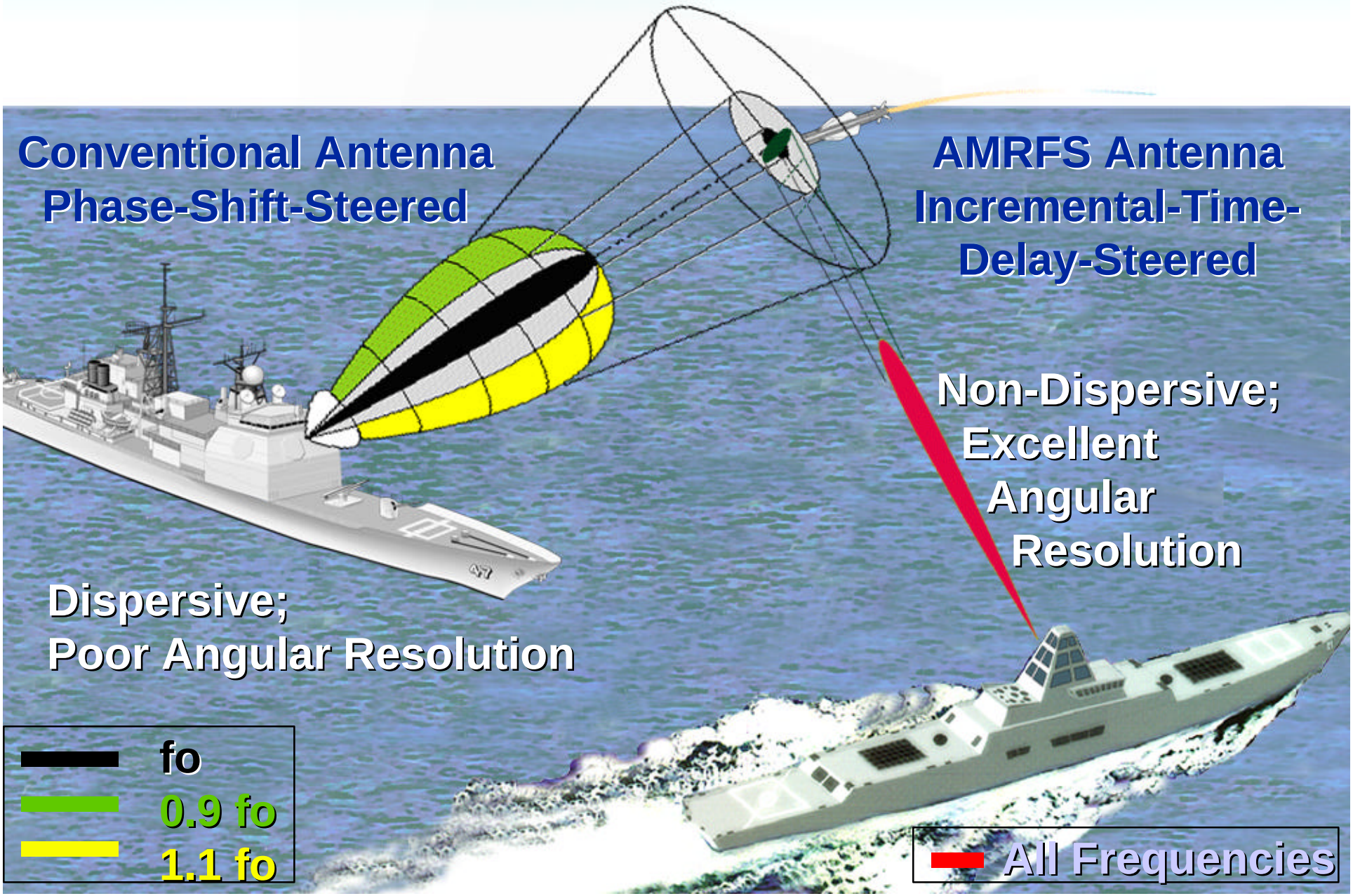

CAMBR LITTORAL WAVEFORM

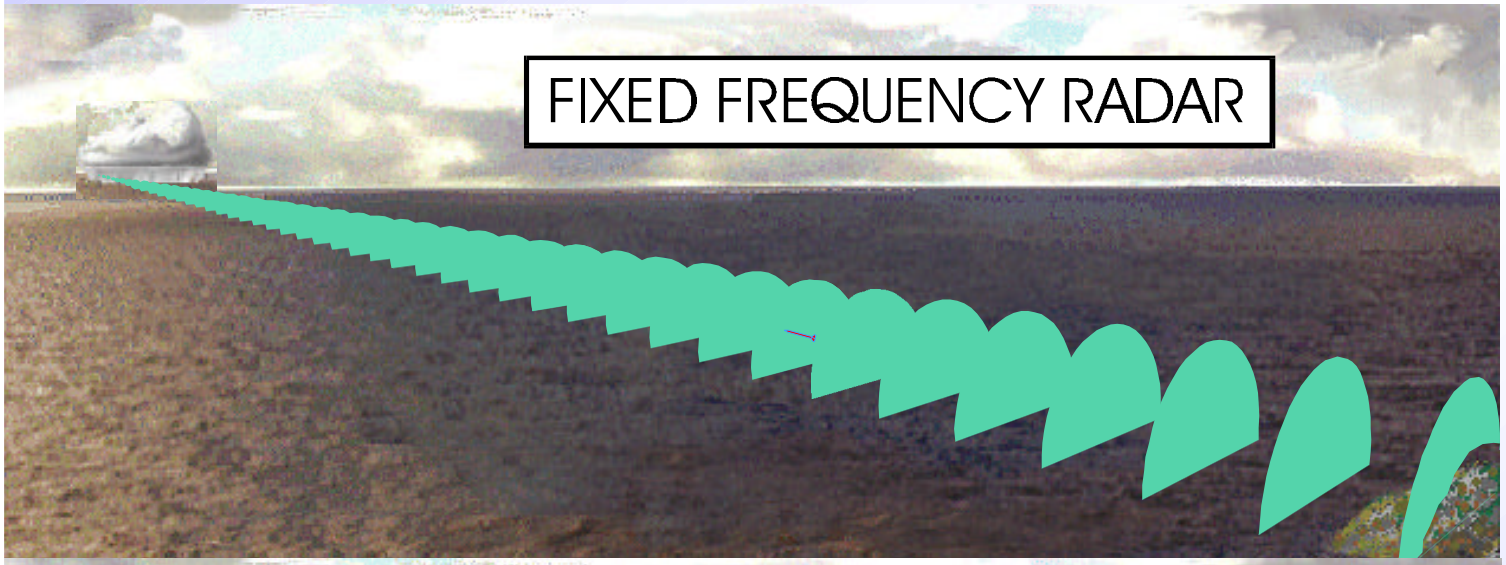

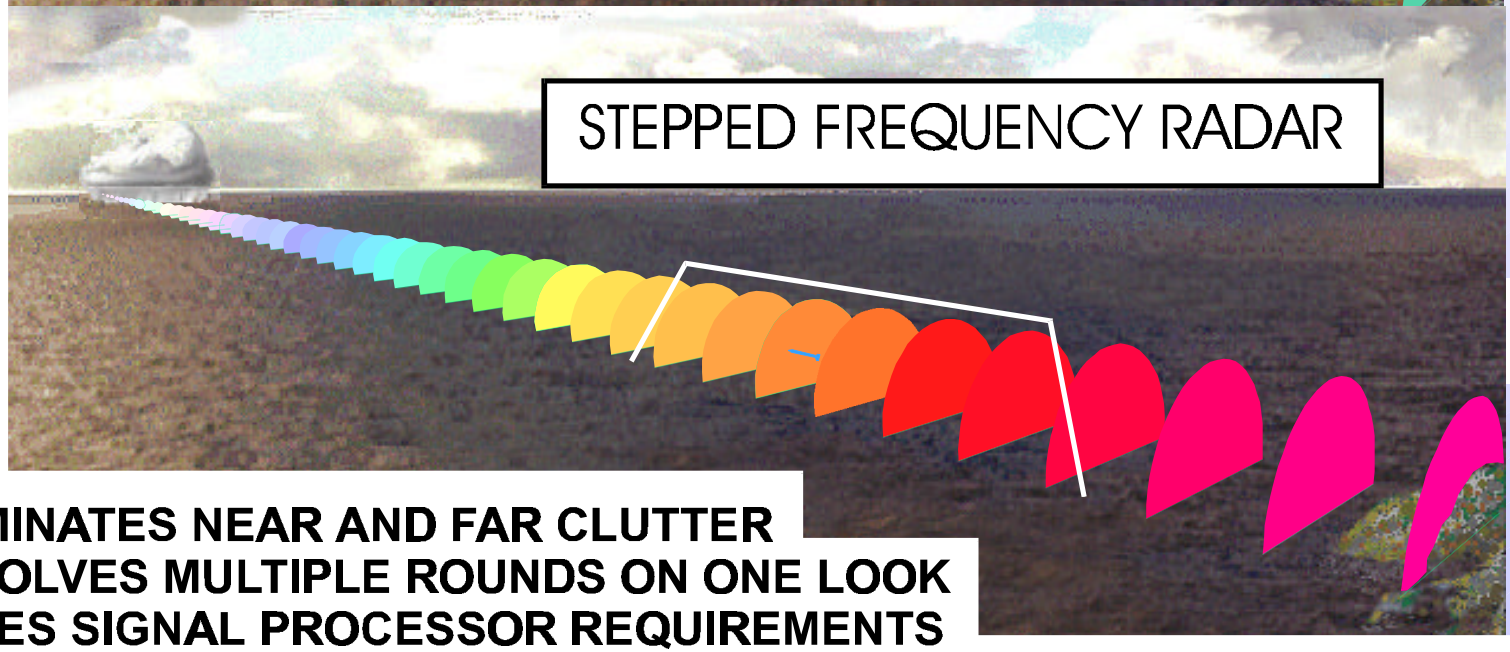

- ELIMINATES NEAR AND FAR CLUTTER
- RESOLVES MULTIPLE ROUNDS ON ONE LOOK
- EASES SIGNAL PROCESSOR REQUIREMENTS
- SMALL LOW FLYER OVER LAND

Comparison of Large Time Bandwidth Pulses

At No Point in Time Do
the Individual "Pulsettes"
Correlate. Signal is "Smeared"
at Target Destination

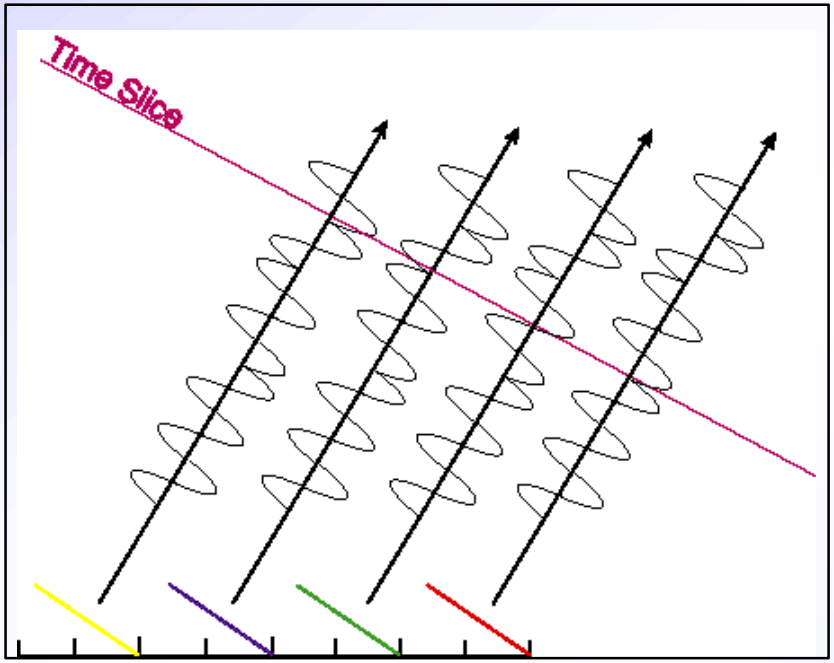

From Phase-Shift-Steered Array

New Capability!

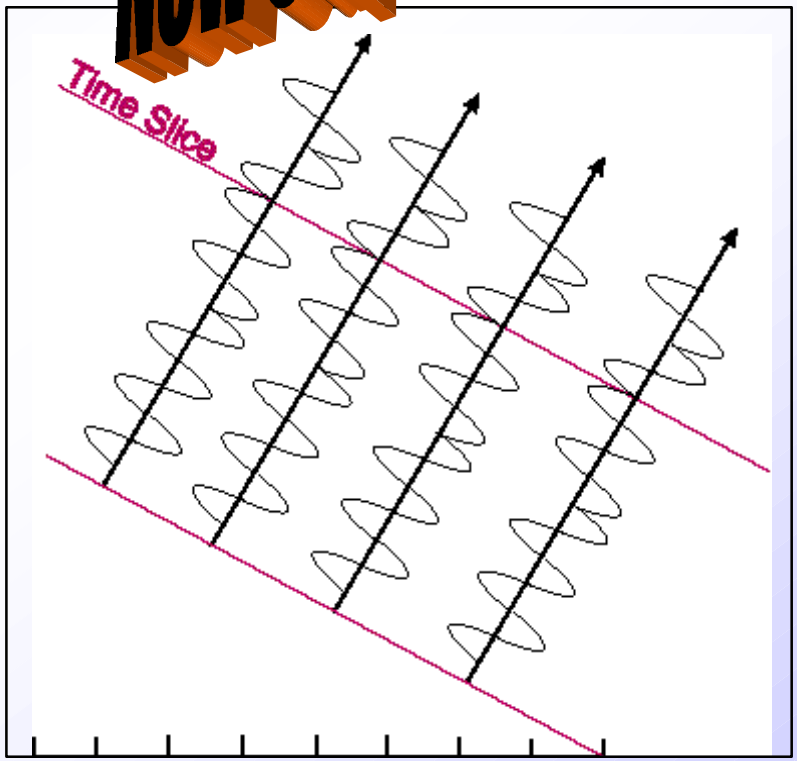

From Time Controlled Steering

4096 Element Array

True Time Delay Beam Steering							
Time Delay vs Angle and Maximum Frequency							
Beam Angle (Degrees)	94 GHz	40 GHz	26 GHz	18 GHz	12 GHz	8 GHz	4 GHz
1	0.09	0.22	0.34	0.49	0.73	1.09	2.2
10	0.90	2.12	3.25	4.70	7.05	10.58	21.2
30	2.66	6.25	9.62	13.89	20.84	31.25	62.5
45	3.75	8.82	13.57	19.60	29.40	44.10	88.2
60	4.61	10.85	16.68	24.10	36.15	54.23	108.5
4096 Array	Maximum Time Delay in Picoseconds						
L (cm)	10.21	24.00	36.92	53.33	80.00	120.00	240.0
1 Degree	5.94	13.97	21.49	31.04	46.56	69.84	139.68
45 Degrees	240.2	564.5	868.4	1254.4	1881.6	2822.4	5644.8
in cm (45)	4.33	10.18	15.66	22.62	33.94	50.90	101.81
	Indicates Length in cm; not time						

An 18 GHz Signal Requires Delays from 0.49 to 1254 Picoseconds!

Direct Digital Synthesis (DDS)

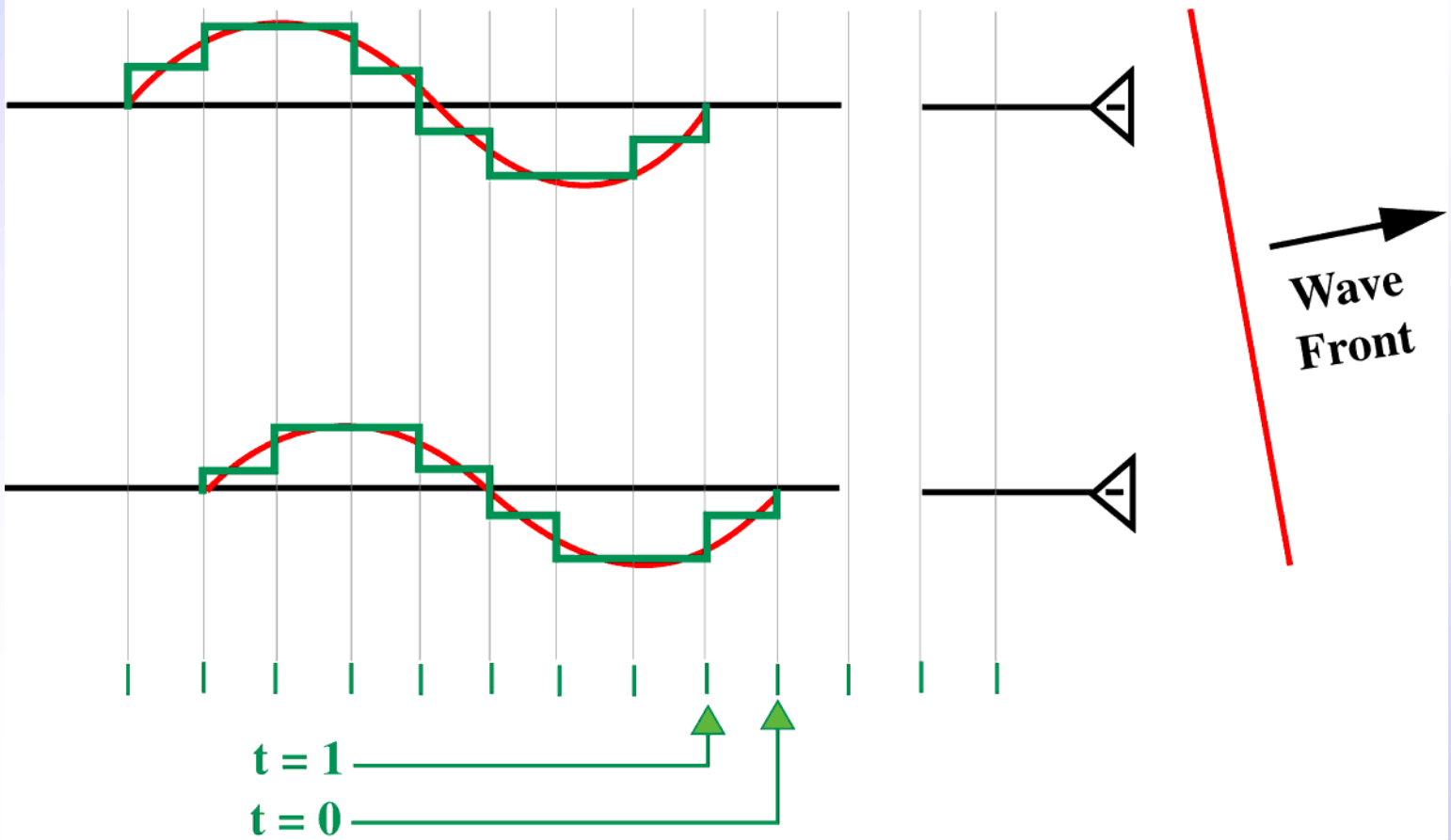

An Analog Signal Can Be Constructed From Digital Sources

100 GHz Logic

Why?

Overcome System/Circuit Receiver Noise

Digitize Microwave / MM Transmit Signals

Versatile Synthesis & Beam Steering

Faster Signal Processing

Impact: Performance & Reduced Life Cycle Cost

Fully Digital AMRFS

Built As A Commodity E/M System For Low Initial Cost and Enormous Life Cycle Cost Savings

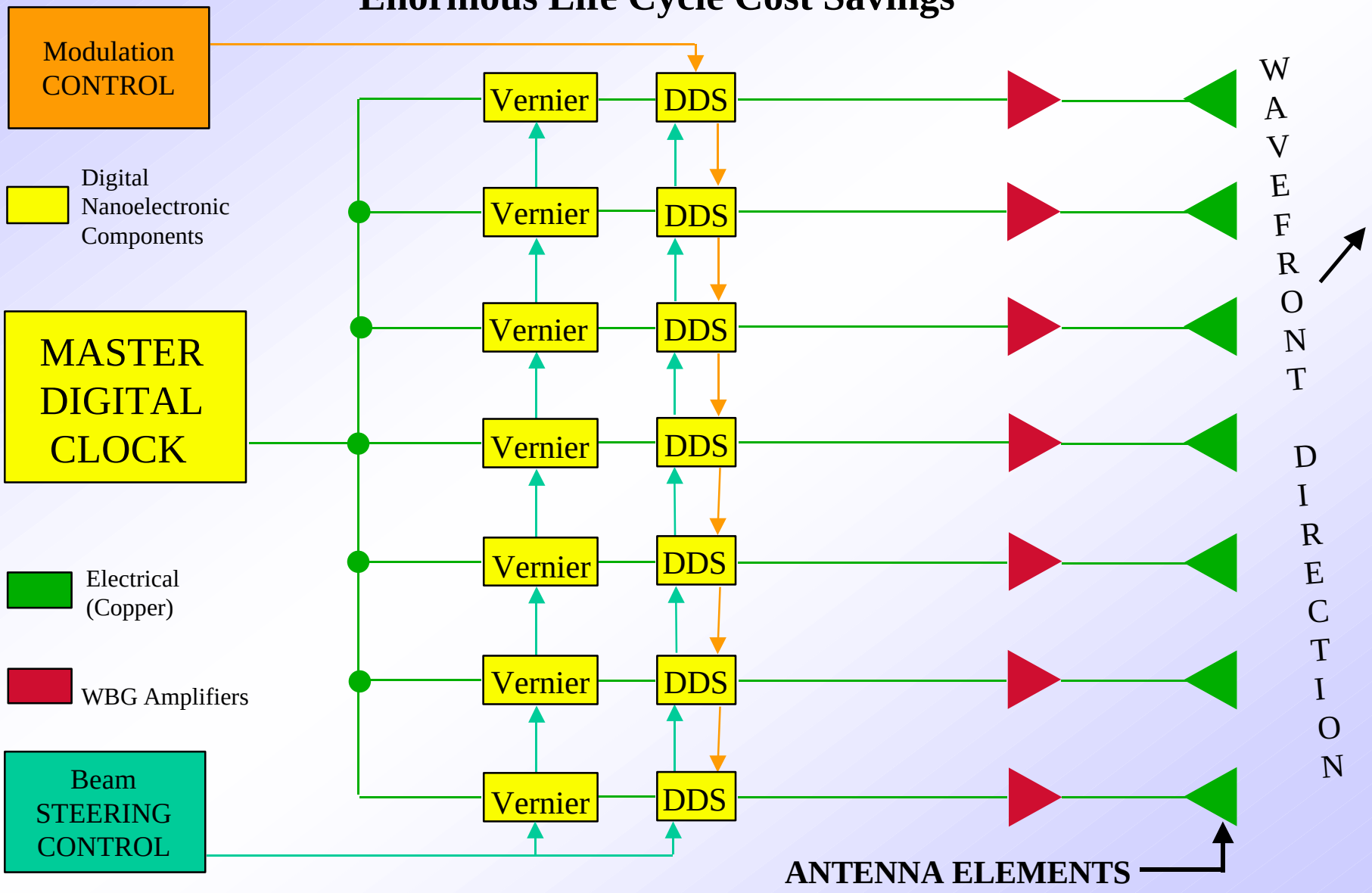

The Hardware Is Virtually Obsolete-Proof!

Electronic Beam Steering Receiver

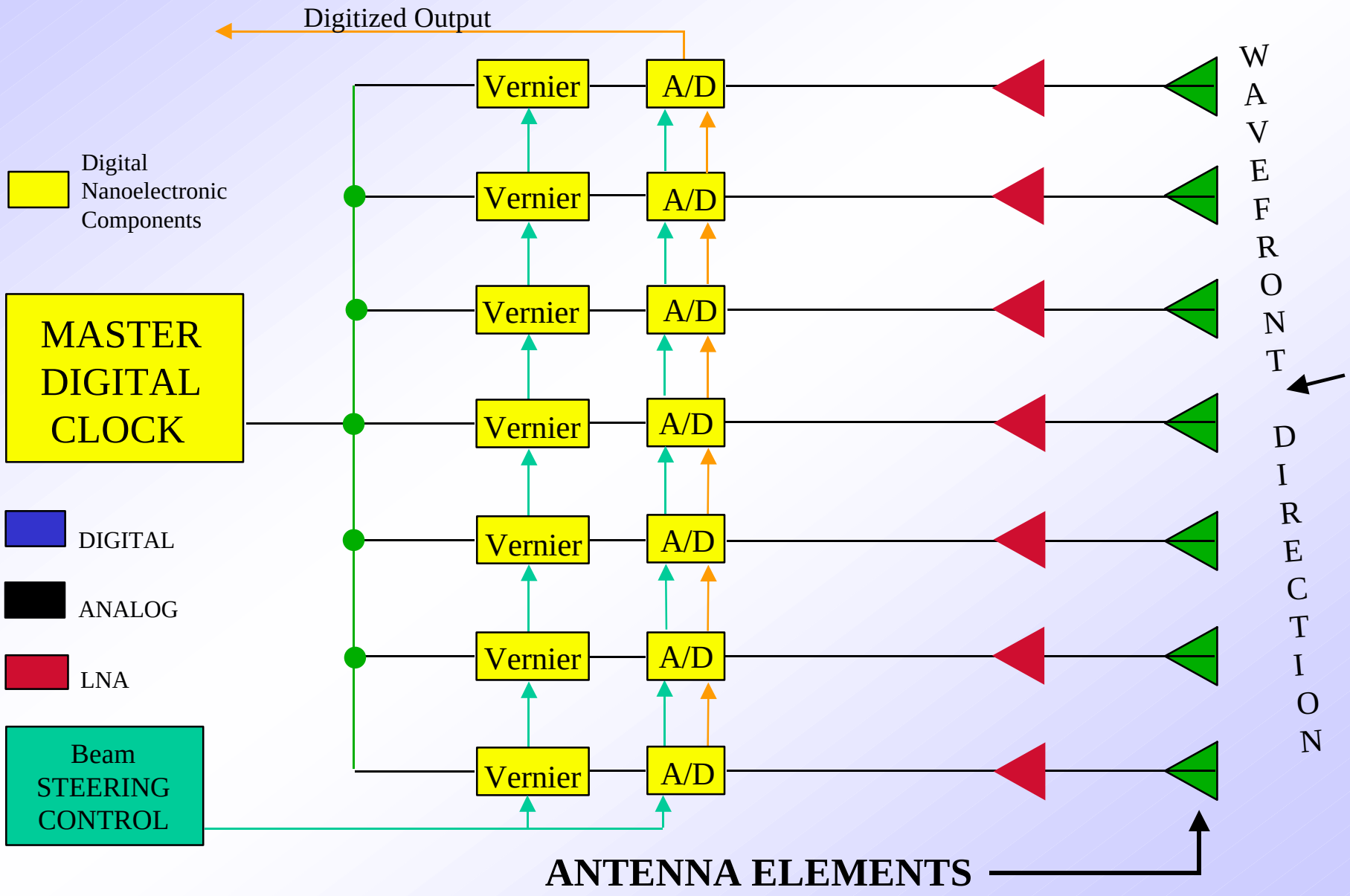

e pluribus unum

=

Radar

EW

COMMS

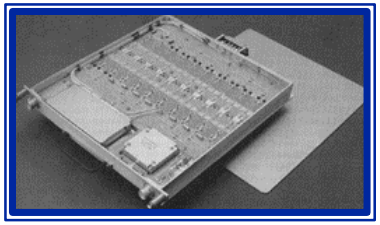

=

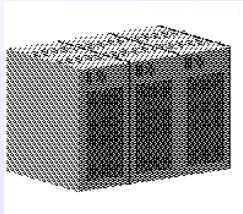

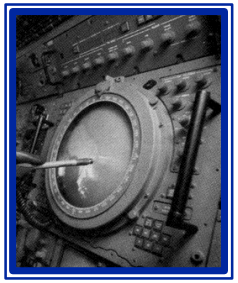

=

The Modern Desktop Computer Built of Commodity Parts For Lowest Cost

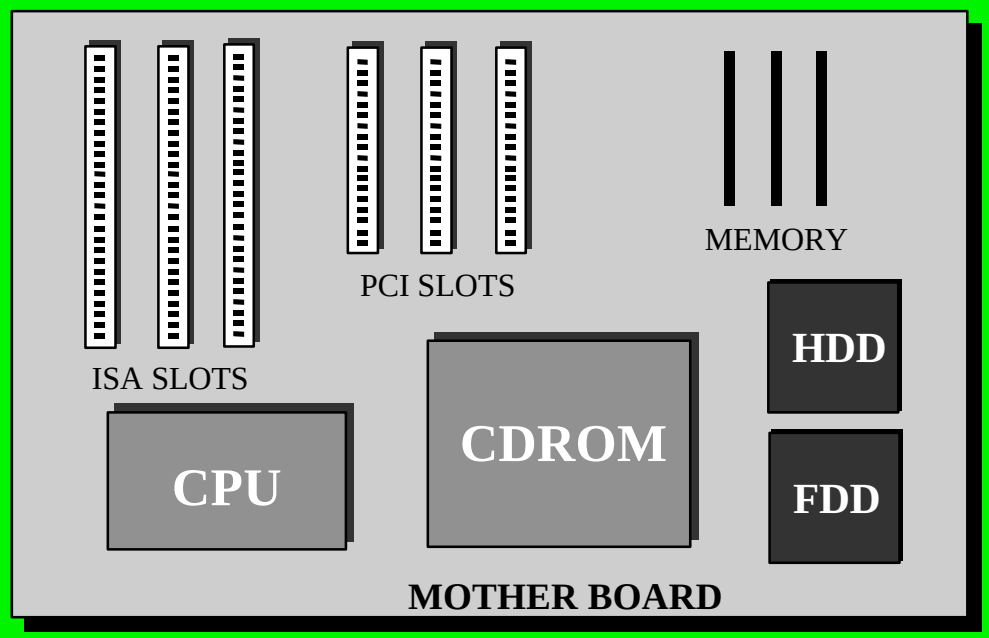

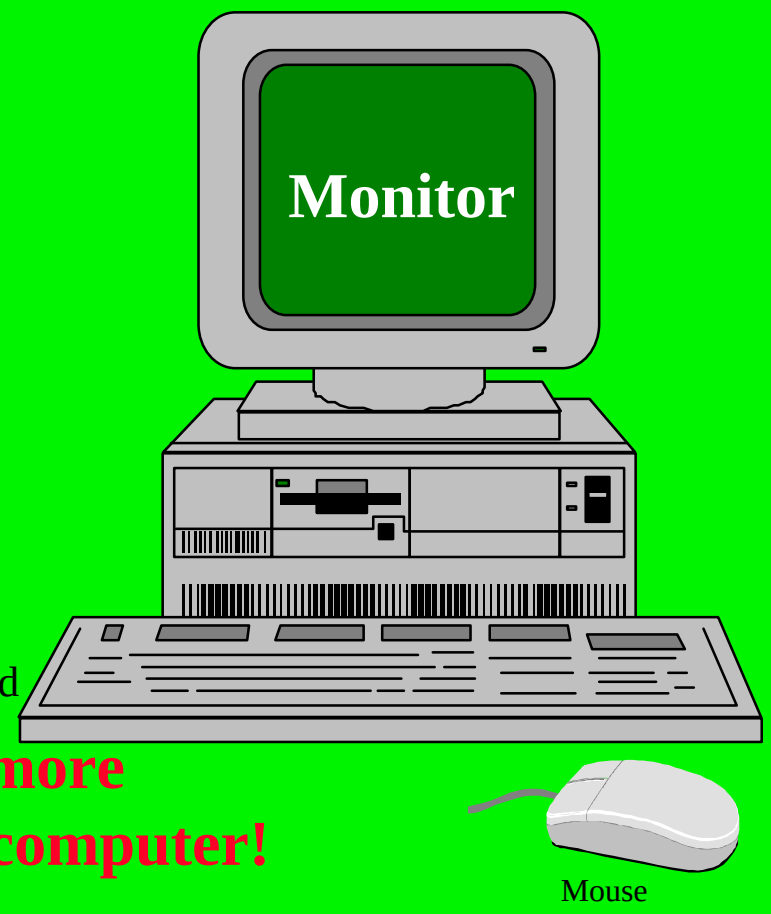

It Can Now Be Configured with more Computing Power Than a 1970 Supercomputer! And at $3K vs $10M

Total Life Cycle Savings Per Ship For a Fully Digital AMRFS

	25 Yrs	30 Yrs	35 Yrs
Initial	15.0M	15.0M	15.0M
Reduced Crew (12 people)	26.5M	30.4M	42.5M
Logistics (Spare Parts Only)	3.5M	4.5M	5.6M
Eliminated Modifications	357.0M	459.0M	500.0M
Sum:	402.0M	509.0M	563.1M

When Digital Synthesis and Beamforming are Realized, It will Revolutionize Warfare

Richard Britton, Chief Scientist
PEO TAD/SC

100 GHz Logic Technology for Signal Processing and Beam Steering

UCSB

contract N00014-98-1-0068, PI: Mark Rodwell

Objective:

100 GHz logic
DC-20 GHz direct digital synthesis, DACs
digital time delay beamsteering

Application: electronically steered arrays

wideband modulation
improved target/decoy discrimination;avoids jamming & multipath fades

Approach:

low parasitic HBT ICs
increase IC size from 5 to 5000 HBTs
low ε_r wiring, low voltage swing logic

Accomplishments:

52 GHz logic (M/S latch) demonstrated
120-HBT ICs demonstrated
130 GHz latches, DACs, DDS in fabrication

Comparison to Other Technology:

SiGe: 48 GHz clock (projected limit)

LP HBT goal: 100-200 GHz clock

52 GHz M/S latch

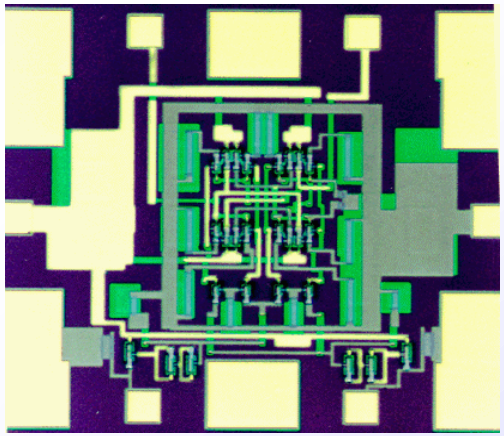

2:1 demultiplexer (120 HBTs)

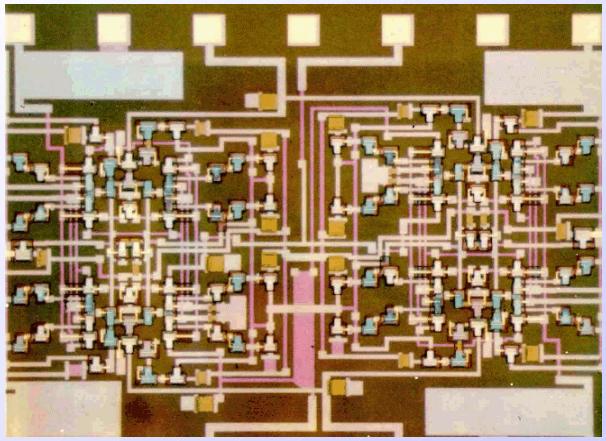

Continuous Transition to ONR Industrial Contractors

HRL InP HBT = High Speed + Low Power

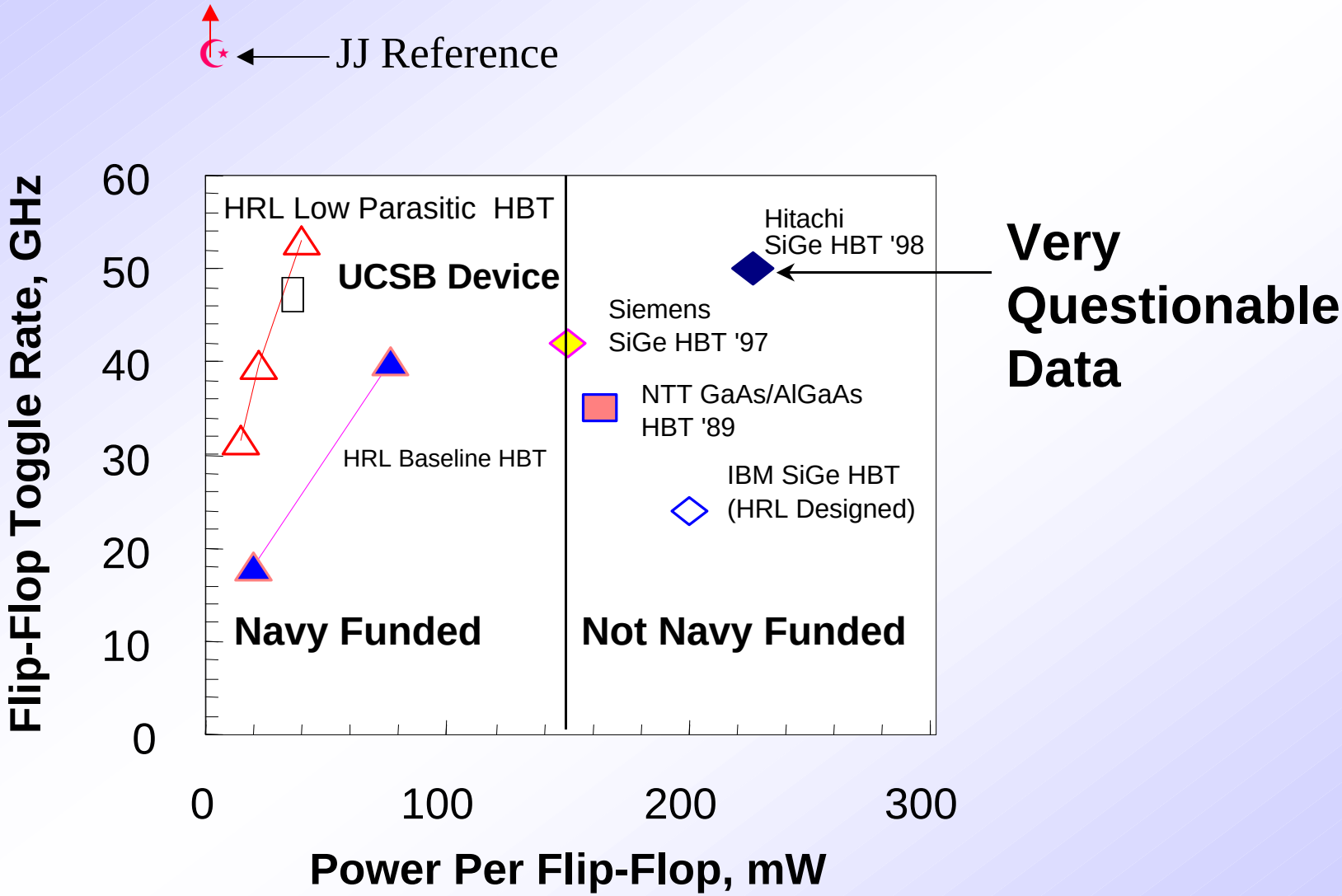

Scaling Down Silicon CMOS Is Not Expected to “Cut the Mustard”

ONR/DUAP *GaInAs on InP Substrate*

QUANTUM CIRCUITS BEAT THE COMPETITION

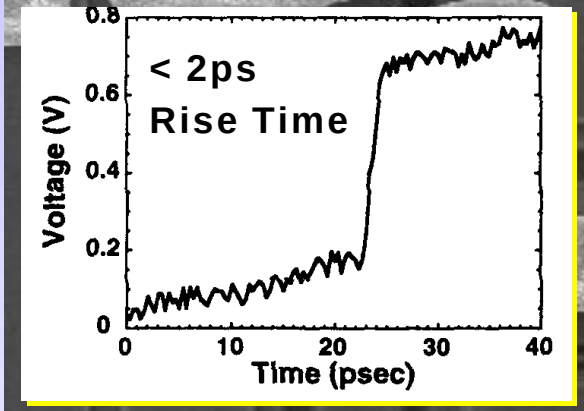

RESONANT TUNNELING DIODE

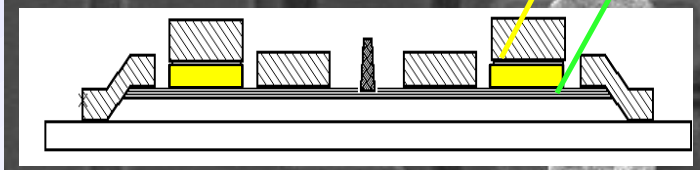

- Dense, Vertical Integration Process
- Ultra-fast RTD/FET/HBT Combinations

Note Size & Power Comparisons Below

RTD

FET

RTDs UNDER METAL

FET

RTD

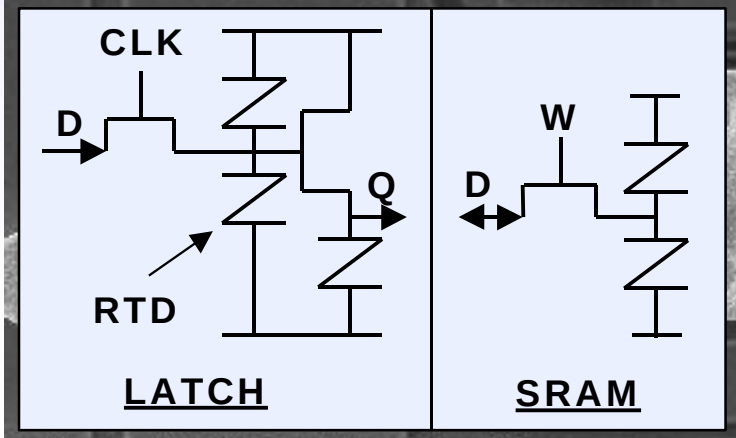

FUNCTION	SPEED	DENSITY	POWER
HFET SRAM (Vitesse)	1 ns	0.4 Mb/cm^2	50 W/Mbit
Quantum SRAM	1 ns	4.4 Mb/cm^2	0.01 W/Mbit
HFET Latch (NEC)	10 GHz	18,370 μm^2	2.8 mW
Quantum Latch#1	10 GHz	300 μm^2	0.3 mW
Quantum Latch#2	10 GHz	20 μm^2	0.03 mW
HBT Latch (Hughes)	27 GHz	23 HBTs	450 mW
Quantum Latch	27 GHz	6175 μm^2	8 mW

Quantum True Time Delay/Multiplexer circuits have been simulated at 100 Gb/sec (10 ps stage delay)

InAs/AlSb/GaSb Quantum Devices for High Speed, Low Power Resonant Interband Tunneling Devices / Circuits

Quantum Device structure (RITD)

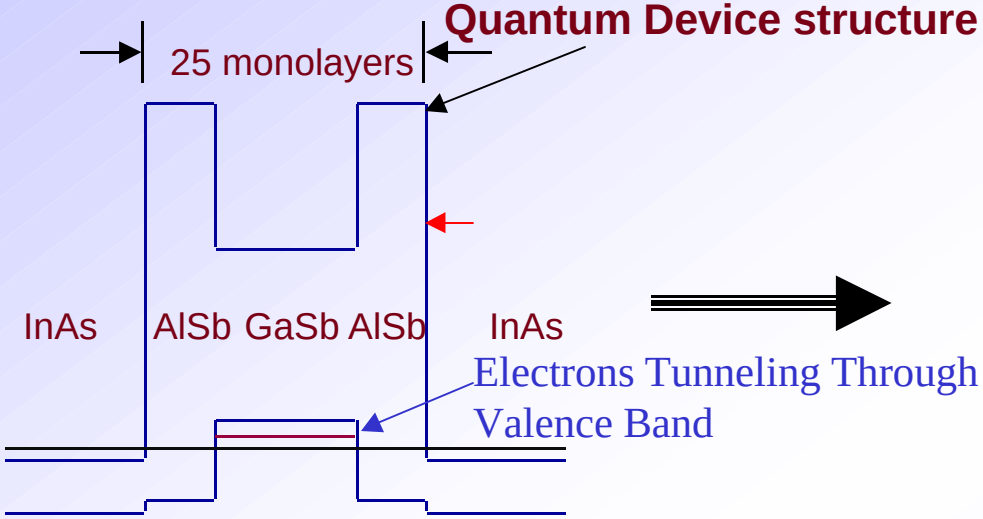

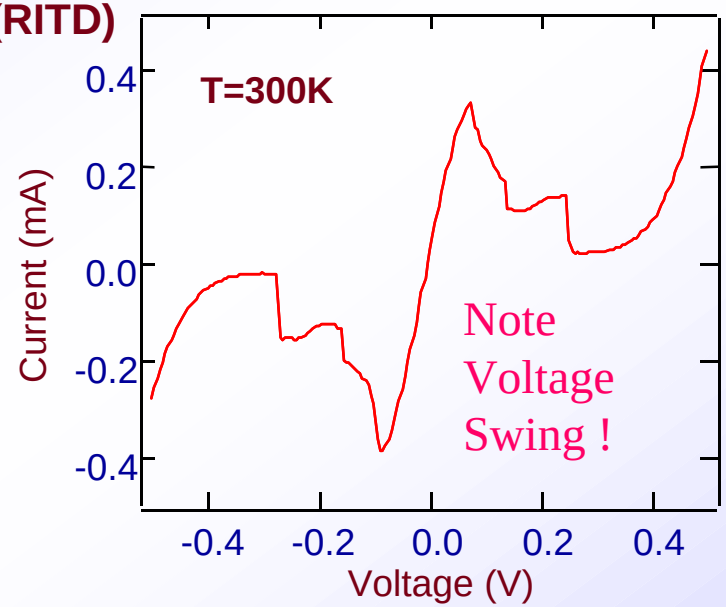

Ideal high speed, low power characteristic optimized for robust circuit operation

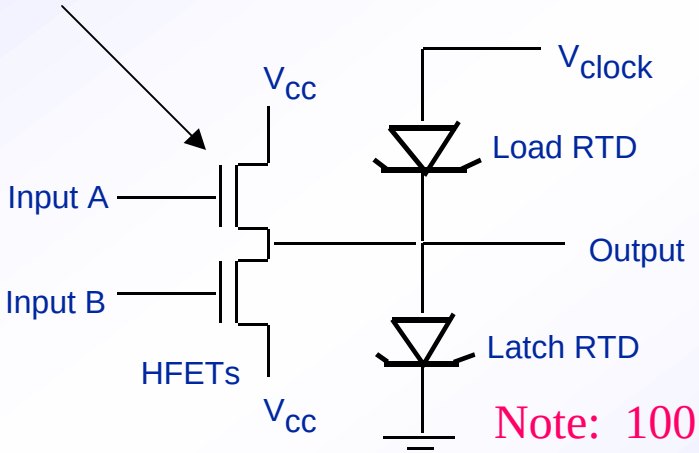

Note: 100 GHz clock!

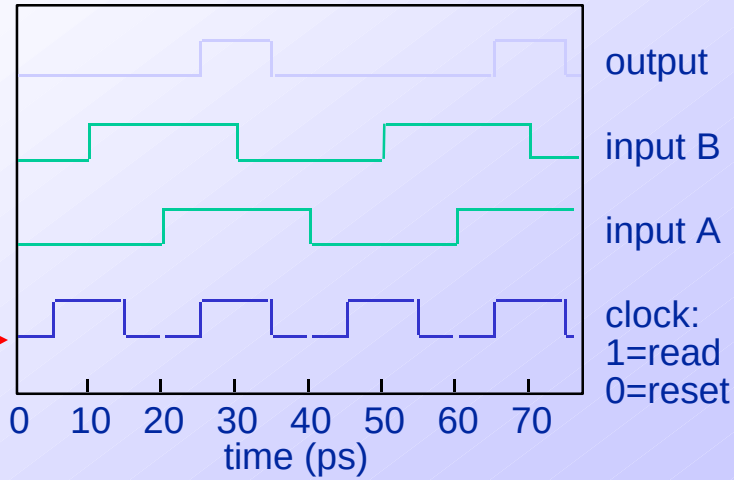

RITD/HFET integration yields compact, nanoelectronic logic element with unprecedented performance

Nanoelectronics R&D Roadmap

Digital Quantum NanoTechnology Supporting Future DoD Applications

FIRST DEMOS

1999
- 4-bit, 10 GSps ADC
- 1 Kb, 2 GHz SRAM
- 25 GHz True Time Delay

2002
- 10 GHz DDS
- 16 Kb, 3 GHz SRAM
- 25 GHz MUX
- 25 GHz,1 Kbit FIFO

2005
- 4-bit, 100 GSps ADC
- 50 GHz DDS/Logic
- 100 Gbps Fiber Link

World's Most Aggressive Logic Program!

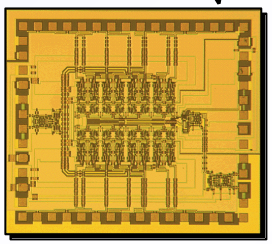

Wideband ADC

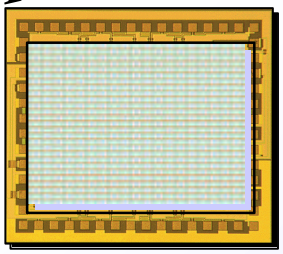

Microwave SRAM

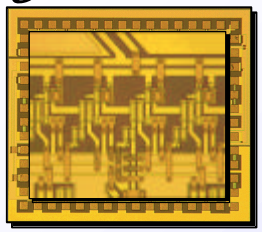

True Time Delay

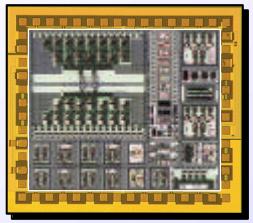

X-Band DDS/ADC

Quantum Advantages
- Power
- Size
- Speed

Two DUAP Contracts

ADC INVESTMENTS AND SYSTEM INSERTION OPPORTUNITIES

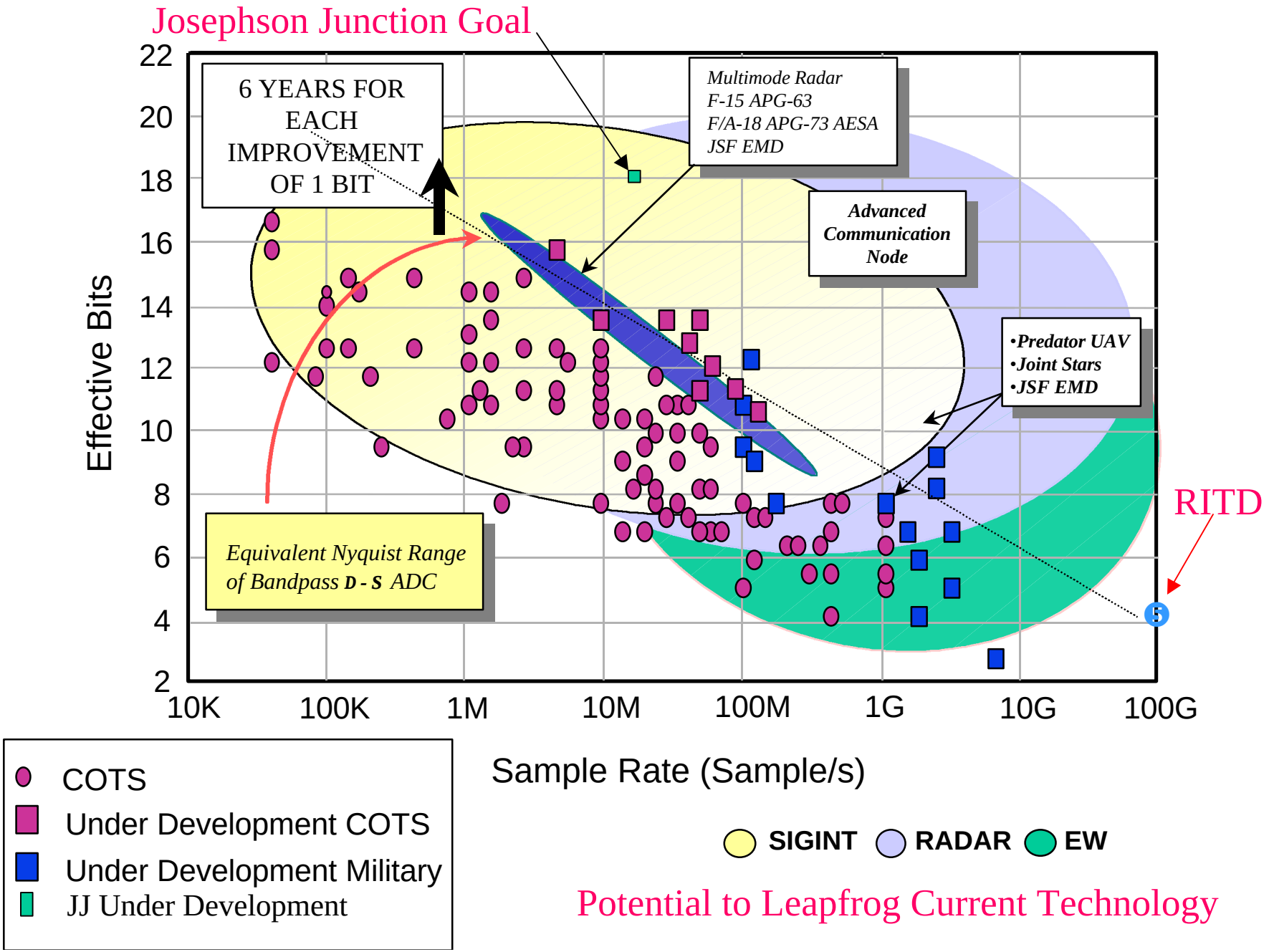

Potential to Leapfrog Current Technology

Autocorrelator Performance
JJ vs Silicon CMOS

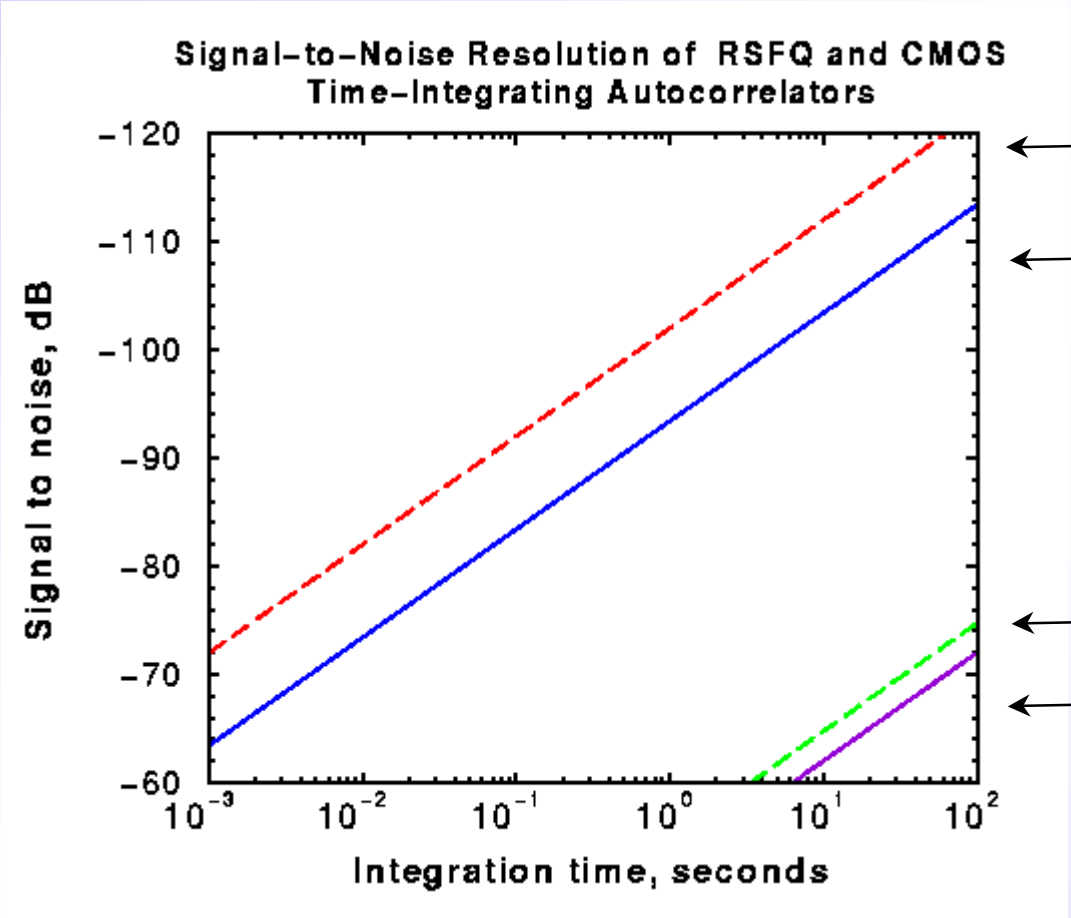

0.8 μm HYPRES technology -
2-bit, 20 GHz BW, 80 GHz clock

3.5 μm HYPRES technology -
1-bit, 4 GHz BW, 16 GHz clock

Demonstrated 4/98

0.5 μm CMOS -
2-bit, 500 MHz,
(Spaceborne, Inc, SBIR proposal, 1997)

0.5 μm CMOS -
1-bit, 500 MHz,
(Spaceborne Inc. SBIR Phase II, 1996)

High Speed Autocorelators Gain Increasing Importance
In a Fully Digital AMRFS System Processing Wideband Signals

Nanoimprint Lithography

Chou, NanoStructure Lab, Princeton University

Results

- Sub-10 nm feature size at 40 nm pitch
- Excellent uniformity over 4 in wafer in a single imprint
- High throughput (potentially 5 sec per wafer)
- Low cost

Impact

- A revolutionary approach to nanopatterning that removes the key obstacle (thruput) to nanostructure commercialization
- Propel future nanostructure research
- Impact future ICs development
- Impact many other disciplines, such as biology, chemistry, medicine, and materials, just to name a few.

Chou, Krauss, and Renstrom, APL, Vol. 67, 3114 (1995); Science, Vol. 272, 85 (1996)

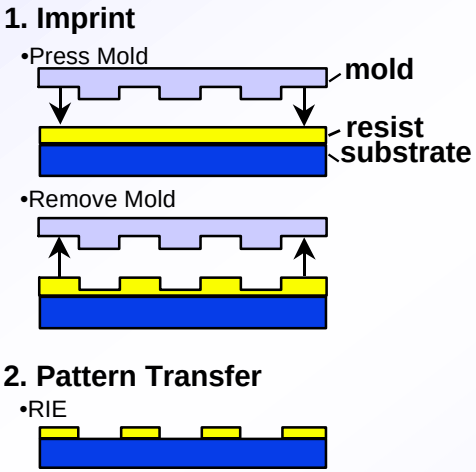

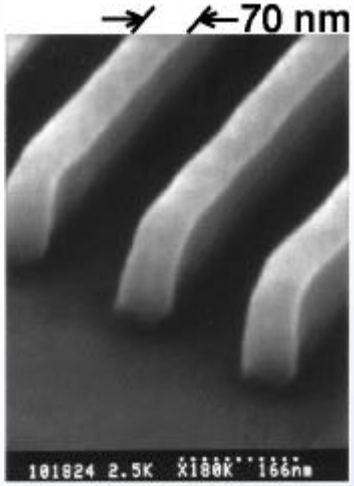

Resist profile

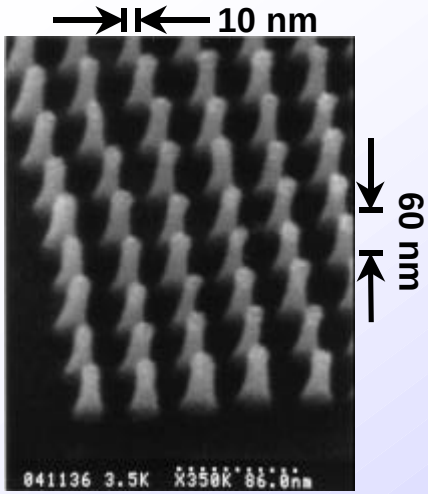

NIL mold

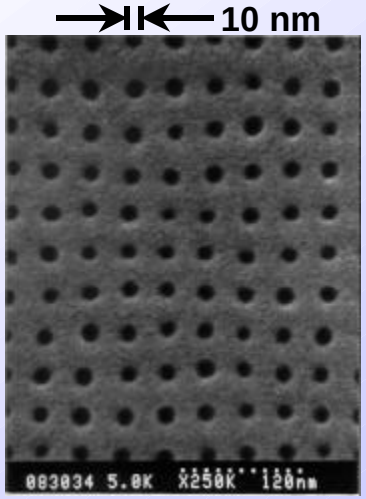

PMMA holes by NIL

Silicon Single-Electron MOS Transistor Memory Operating at Room Temperature

- The first room temperature silicon single-electron MOS memory
- Channel width is smaller than Debye screening length of a single electron
- Discrete shift in threshold voltage
- Staircase-relation between the threshold voltage shift and the charging voltage
- Self-limiting charging process

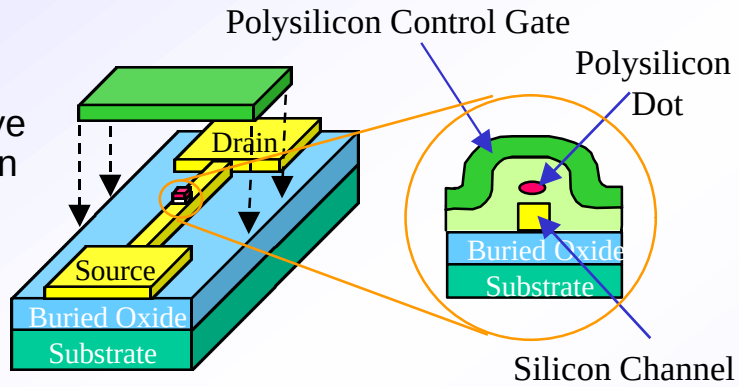

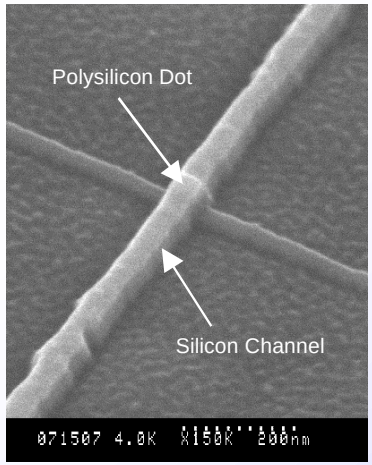

Schematic and SEM micrography of a SEMM

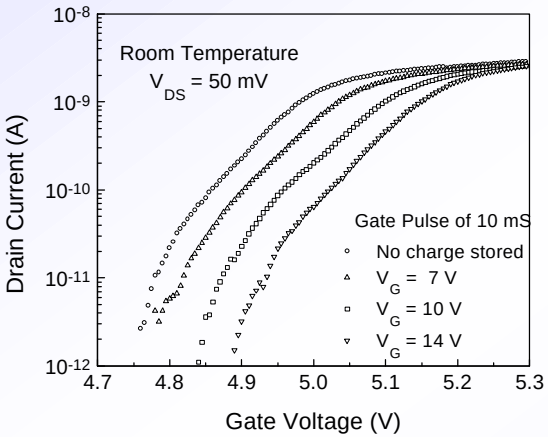

Discrete shift in ΔV_{th}, each shift due to adding a single electron to the dot

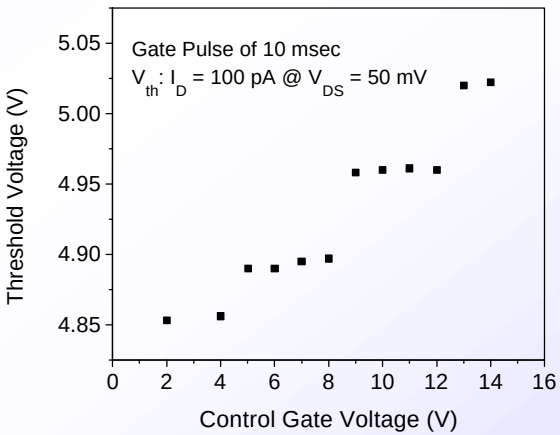

V_{Ctrl-g} is continuous, but ΔV_{th} is quantized

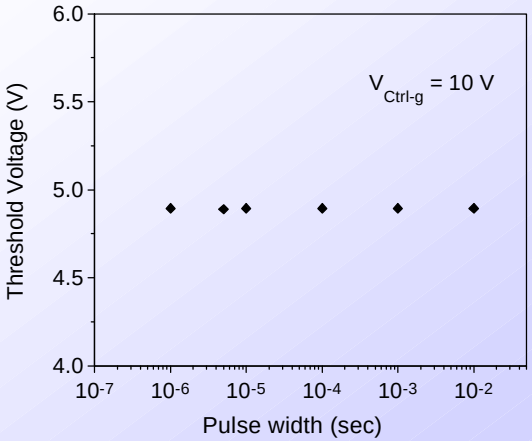

Time independent charging: self-limiting charging process

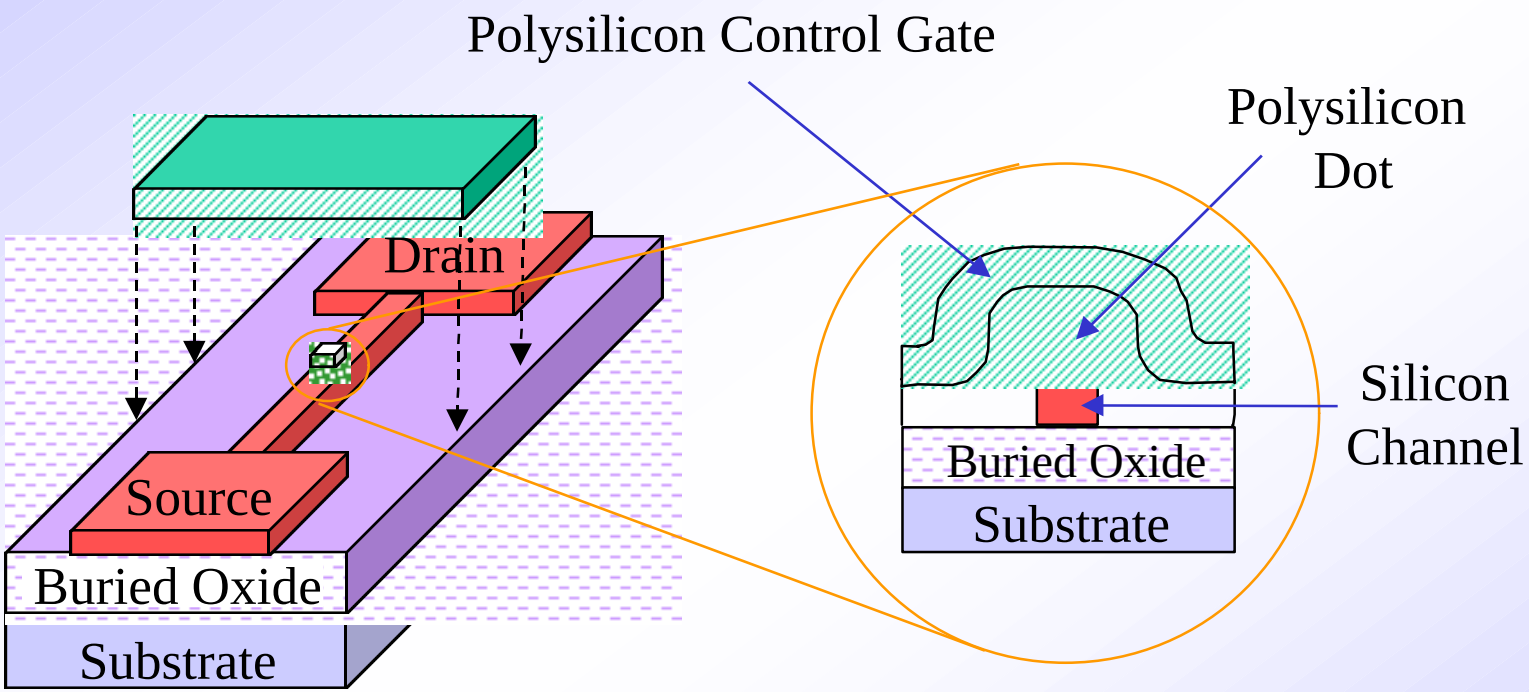

Fig. 1

L. Guo et al. Submitted to Science

Mesoscopic Magnetoquenched Superconducting Valve (MMSV)

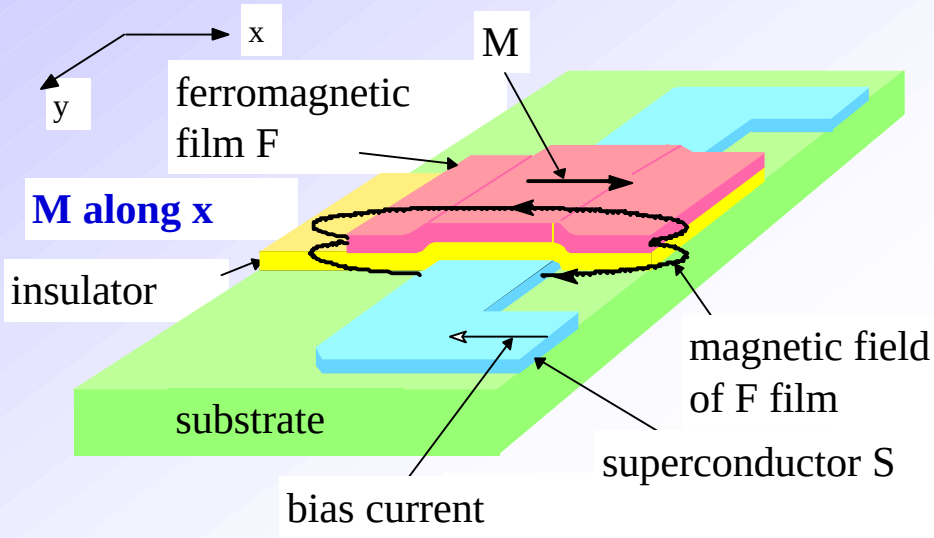

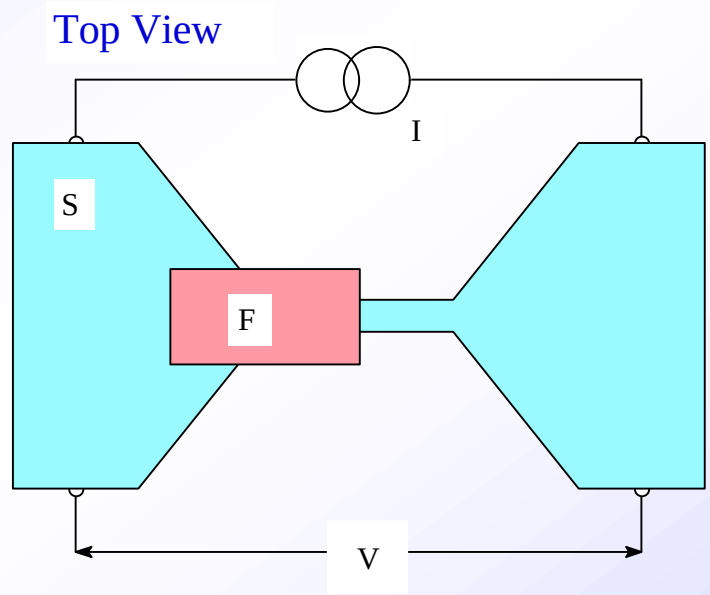

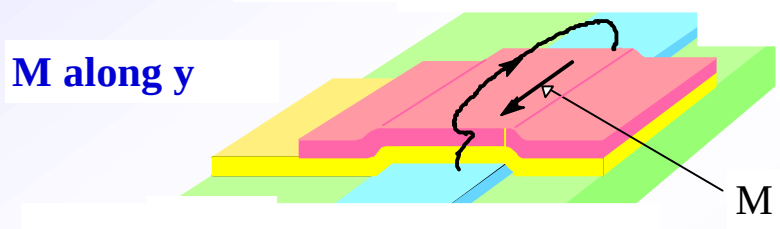

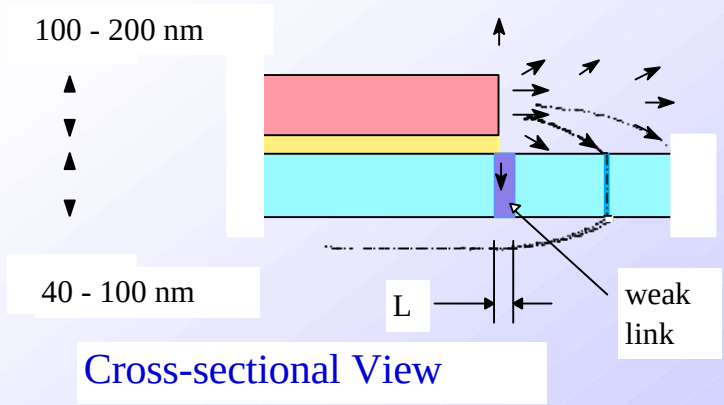

J_c suppressed when **M** is along y

A Single Electron With the Proper Spin, Can Quench The S/C Channel

Quenched state, microwave response

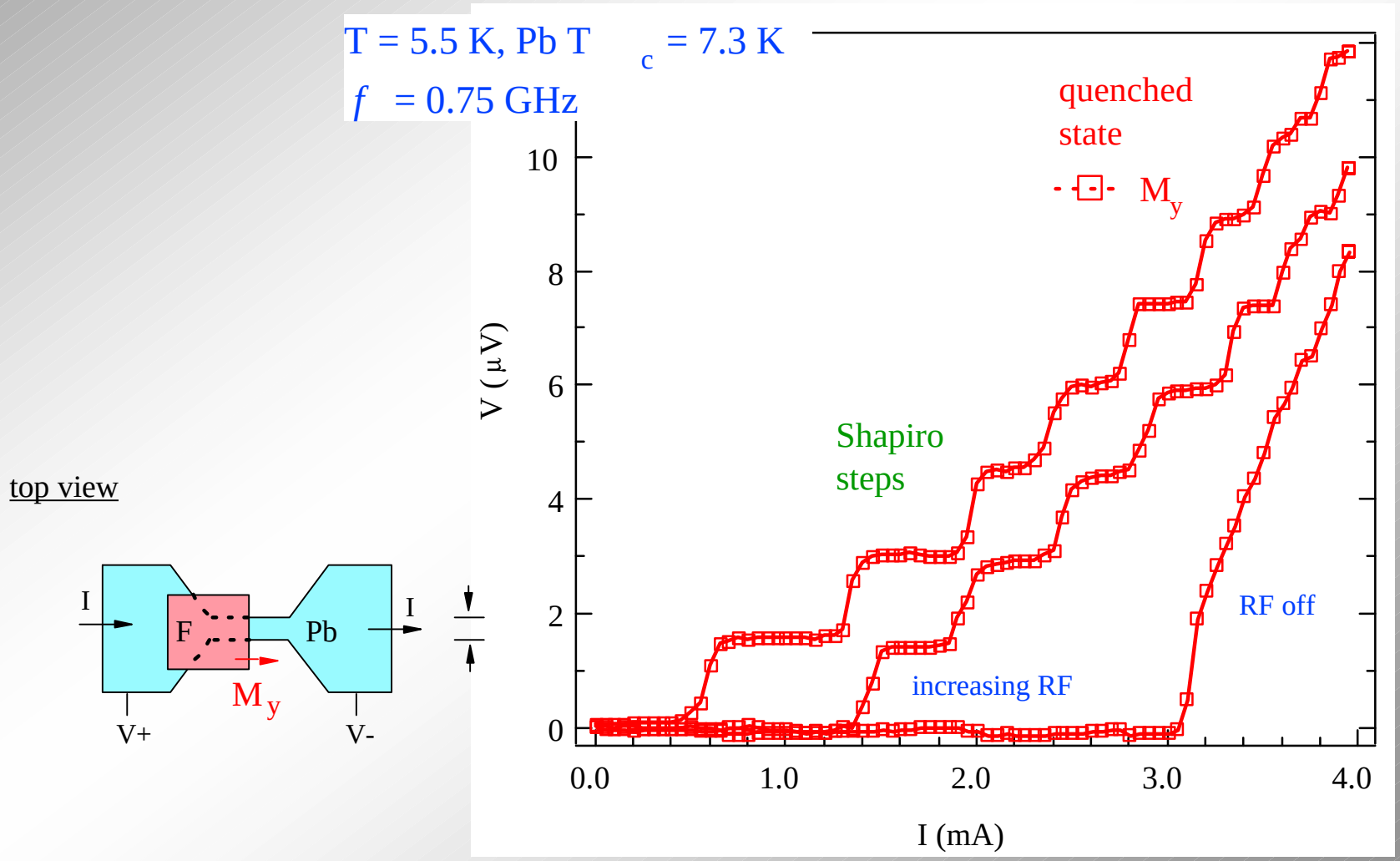

Spin Coherence in Solid State Systems

- establish and store coherence between spin states in doped semiconductors
- optical manipulation of carrier wavefunctions

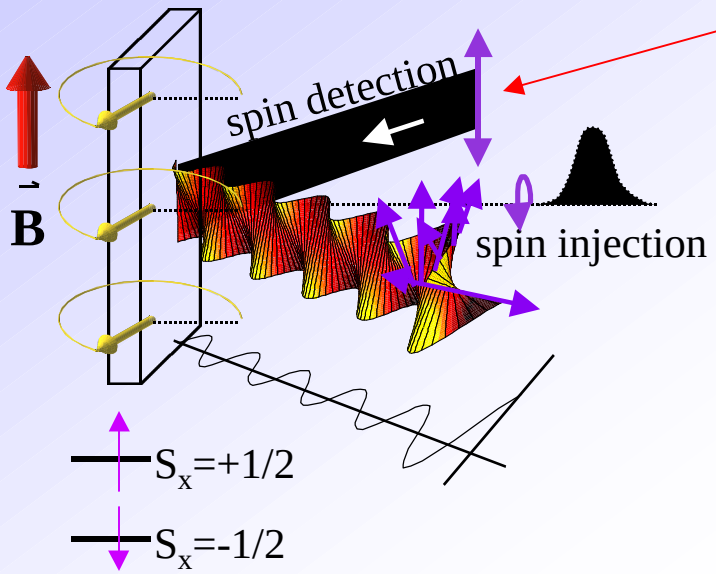

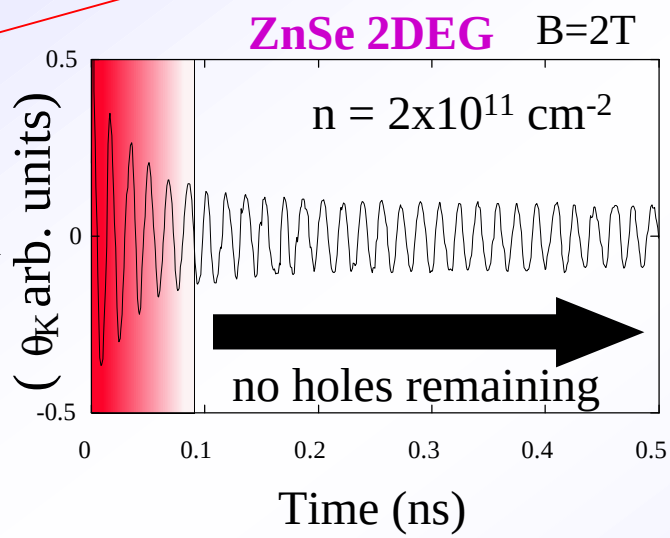

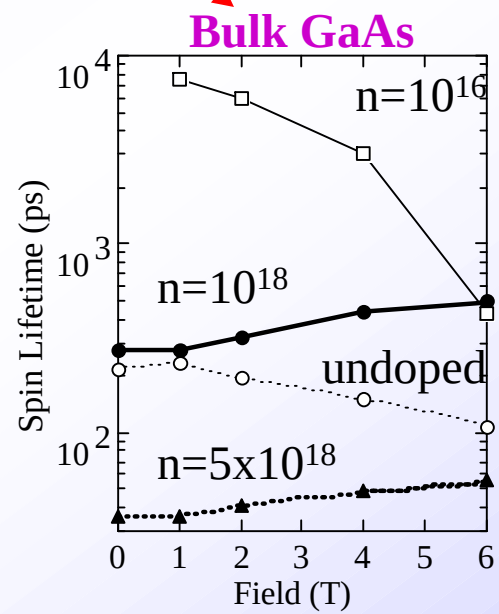

Objectives	Materials Issues/Measurement	Hosts
• minimize decoherence	• dopant levels and profiles • electronic bandstructure • dimensionality • disorder	• II-VI and III-V(GaAs) • Type I, II QWs • QDs *(atomic analogy)* • GaAs, GaN
• spin transfer to magnetic lattice • inject, amplify, control • “drag and drop” spins	• magnetic doping • spin-echoes in solids • spatially-resolved transport	• ZnSe, GaAs, GaN • ZnSe, GaAs • GaAs, GaN